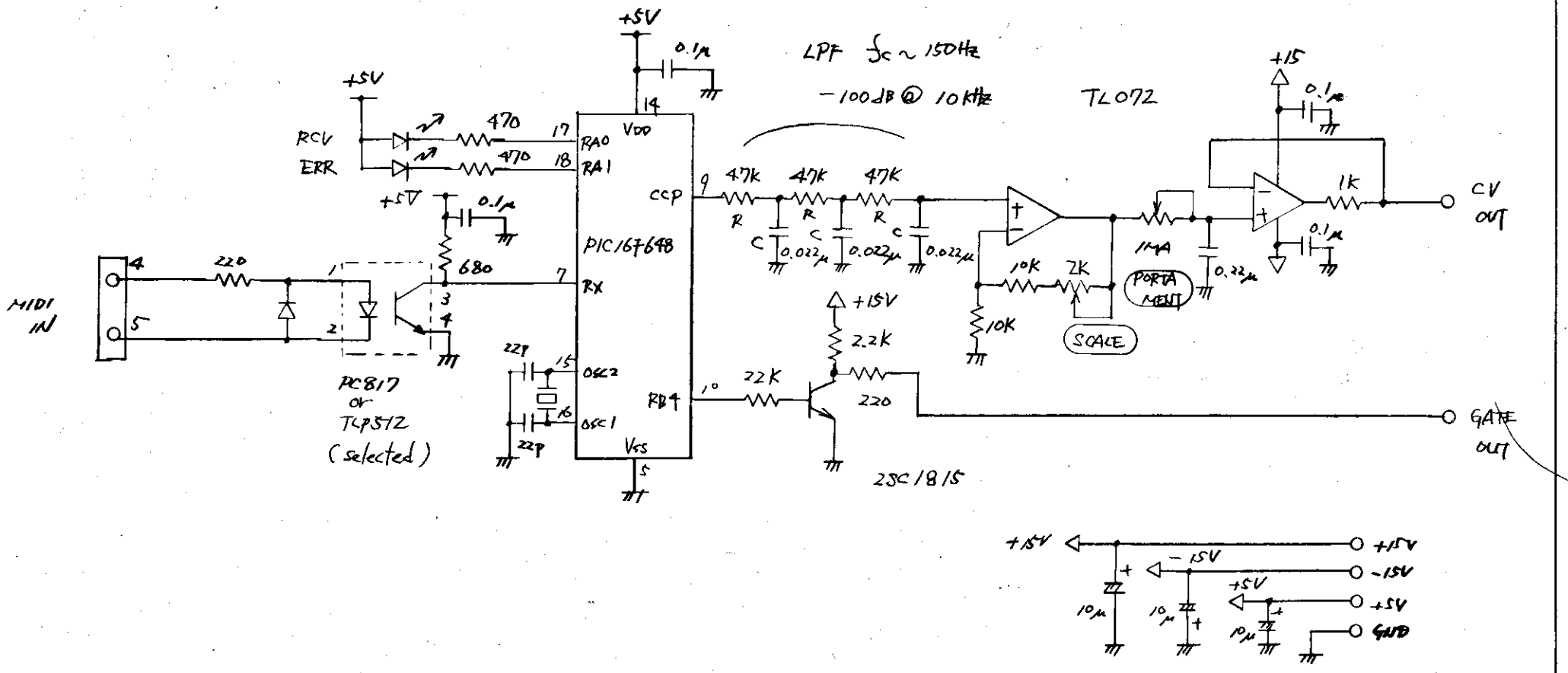

PROJECT DIY SYNTHE		DWN 0055
TITLE EZ MIDI-CV (PWM)		REV A
DATE Dec.12 2004	Radio Junk Box	